AUGUST 31, 2015 / DERAILLEUR SYSTEMS

FRONT DERAILLEUR ADJUSTMENT

This article will discuss the basic adjustment of the front derailleur. This article assumes the derailleur is compatible with the shifting system and is not extremely worn out.

1 SERVICE PROCEDURES

WHAT TOOLS DO I NEED?

The front derailleur simply shoves the chain off one front chain ring and onto another ring. The cage surrounding the chain is pulled in one direction by the inner wire. A spring in the derailleur returns the cage to the other direction when the inner wire is relaxed. A properly adjusted front derailleur should shift the chain between the front chainrings but will not throw the chain off the rings. The basic adjustments for the front derailleur are the height, rotation, limit screws and inner wire tension (index setting).

It is generally a good idea to lubricate the pivot point of the front derailleur with a light lubricant. The cable inner wires should also be lubricated. If you have loosen the inner wire pinch bolt, lubricate those threads as well. When tightening this pinch bolt, secure to approximately 30-40 inch-pounds. This is about 10 pounds of effort hold a wrench 3 inches from the bolt.

2 FRONT DERAILLEUR HEIGHT

Before checking limit screw adjustments, check the derailleur positioning. If the derailleur cage is too far above the large chainring, it is more likely to shift poorly. If the derailleur is scrape against the chainrings or jam the chain when shifting.

PRIVACY SETTINGS

Some front derailleur models do not have height or rotation adjustments. These models mount on a plate and both height and rotation settings are preset. Additionally, some bikes have a bracket commonly referred to as a “braze-on” for front derailleur mounting. This bracket will allow limited height and rotational settings.

1. Inspect height alignment of front derailleur. The outer cage plate must be positioned over the largest chainring when viewing height. Simply grab the exposed front derailleur inner wire until outer cage plate is directly over outer chainring teeth. Use care to not shift the derailleur cage past this point. Note height and direction of change needed. It is then necessary to relax the cable to loosen the mounting bolt and raise or lower the height as needed.
2. The gap between the teeth of the outer chainring and lower edge of the outer cage plate should be 1-2mm, about the thickness of a penny. Using a penny or a dime as a feeler gauge, fit it between the chainring teeth and the cage plate. It should just fit between the teeth and plate.
3. To lower cage, release inner wire tension completely by shifting to innermost chainring. Note angle of outer cage plate relative to chainring.
4. Front derailleur clamps typically leave a mark on the frame, which is useful as a reference when changing height. Loosen derailleur clamp bolt, change derailleur height, and return cage to same rotation relative to chainring. Tighten clamp bolt. Move outer cage plate over outer chainring, and check height again. Repeat this process until cage plate height is 1-2mm above outer chainring.

3 FRONT DERAILLEUR ROTATIONAL ANGLE

PRIVACY SETTINGS

The front derailleur cage should be approximately parallel to the chain. If the derailleur cage is rotated too far from this position, it will shift poorly. If the derailleur mount is a clamp type, its rotation can be changed. Generally, the outer cage of the front derailleur should be aligned to the chain. Image C below shows adequate alignment.

1. Shift chain to outermost chainring and outermost rear sprocket.
2. Sight chain from directly above chainrings. Consider the chain as representing a straight line. Compare this line to outer derailleur cage plate. Outer cage plate and chain should be parallel. Keeping the cage and chain parallel will minimize the risk of the chain jumping off the outermost ring. If cage is not parallel, there will be a relatively large gap at either the back or the front end of the cage, and the chain may over shift.

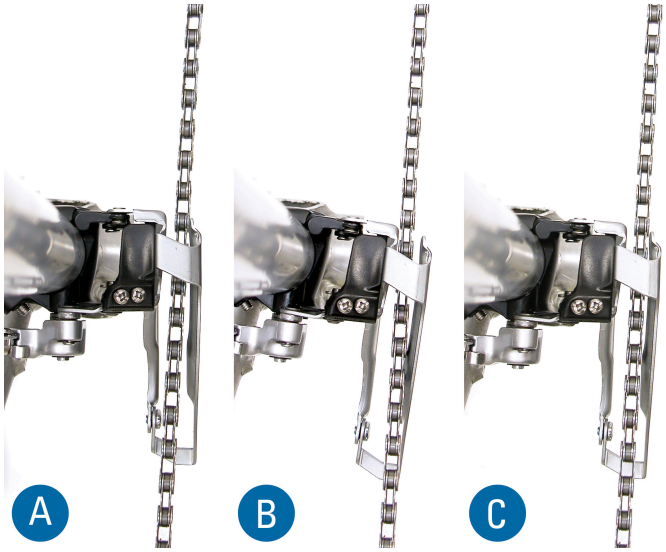

DERAILLEUR A IS ROTATED TOO FAR COUNTER-CLOCKWISE. DERAILLEUR B IS ROTATED TOO FAR CLOCKWISE. NOTICE REAR END OF CAGE IS INWARD, TOWARD MID BIKE PLANE. DERAILLEUR C IS ACCEPTABLY ALIGNED.

3. If derailleur cage needs to be rotated, note direction of desired rotation.
4. Release inner wire tension by shifting to the innermost chainring.
5. Many clamps leave a slight marking on the frame. Use this scarring as a reference when changing height. It is also possible to use a pencil to make two reference marks on the frame, one for height and a second, vertical mark, to reference rotation. Use the marks to avoid inadvertently changing height.
6. Loosen clamp bolt and slightly rotate in correct direction. Use care not to change height. Tighten derailleur clamp bolt.
7. Shift to outer chainring and observe rotation alignment. Repeat adjustment if necessary.

NOTE: Some front derailleur models do not have height or rotation adjustments. These models mount on a plate and both height and rotation settings are preset. Additionally, some bikes have a bracket commonly referred to as a “braze-on” for front derailleur mounting. This bracket will allow limited height and rotational settings.

PRIVACY SETTINGS

4 LIMIT SCREW SETTINGS

Limit screws stop the inward and outward travel of the front derailleur cage. Limit screws are marked “L” and “H.” The L-screw will stop the motion of the derailleur toward the smallest chainring. The H-screw will stop the motion of the derailleur toward the largest chainring.

If the limit screws lack any marking, you will need to determine which are the “H” and “L” by testing. Begin with the chain on the smallest cog. Relax the cable tension completely using the cable barrel adjuster. Place a hand on the derailleur body to feel for any lateral motion, and select one screw to turn one full turn clockwise and then counter-clockwise. If you felt motion in the derailleur, this is the “L” screw. If there was no motion, do the same test with the other limit screw. You should consider marking the “L” screw permanently. The other screw by default is the “H” screw.

Although the limit screws will stop the derailleur, it is the inner wire and derailleur spring that make the derailleur move. If the inner wire has too much tension, the derailleur will not rest on the L-screw stop. If the inner wire tension were to change, the derailleur inner limit would also change, possibly causing the chain to fall off the rings.

5 L-SCREW ADJUSTMENT

The L-screw controls the inward most travel of the front derailleur. Set adequately, it allows the chain to shift to the smallest ring, but not beyond so it falls off.

1. Shift chain to innermost rear sprocket and innermost front chainring. Inspect derailleur for marking indicating “L” screw.
2. Check inner wire tension. It should be fairly loose at this time. If inner wire is taut, turn ster clockwise into housing. The barrel adjuster is typically located where

PRIVACY SETTINGS

the cable housing enters the shift lever. If barrel adjuster is already fully turned into housing, loosen inner wire pinch bolt, slacken inner wire and retighten bolt.

3. Sight gap between inner chain plate and inner cage plate. Only a small gap should be visible, about 1/16" or 1mm, about the thickness of a dime.
4. Pedal bike slowly and continue to sight gap. Set clearance at tightest point in chainring rotation. Adjust L-screw so there is a small gap between inner cage and inner chain plate. Pedal bike and check that chain is not rubbing cage as chainrings turn.

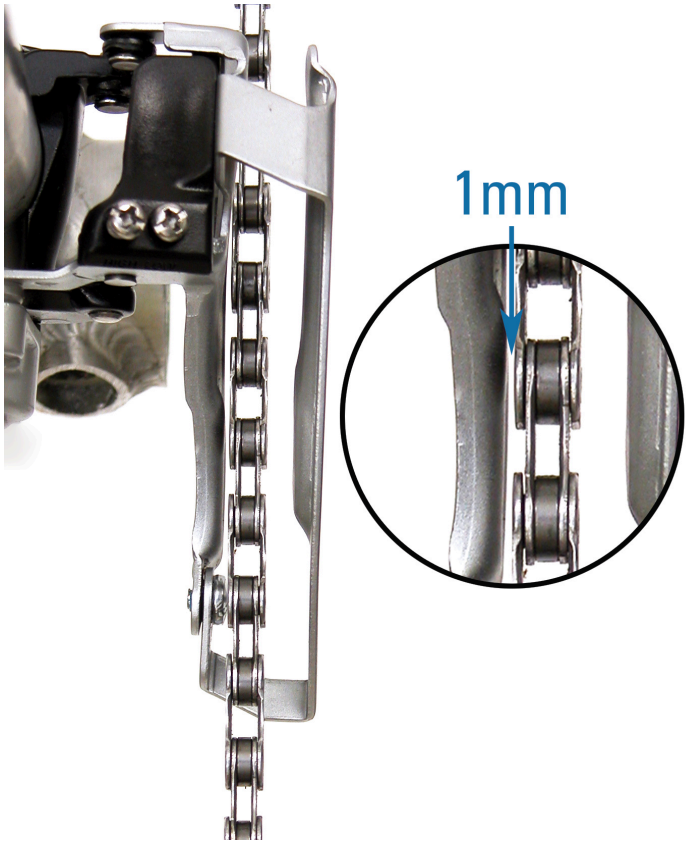

   If there is no gap and chain is rubbing cage, loosen L-limit screw 1/8 turn (counter-clockwise). Inspect for gap again and repeat until slight gap appears.

   If the gap appears larger than 1mm at its widest point, tighten the L-screw, in small increments, until the gap closes.
5. Test the shift by shifting chain to next chainring then shift back to the innermost ring. Do not use the shift lever. Pull on the inner wire to shift the derailleur. Using the lever may confuse limit screw issues with cable tension issues. If chain shifts quickly, limit screw setting is adequate.
6. If the shifting appears is slow (requires more than one pedal revolution to initiate shift), turn L-limit counter-clockwise 1/8 turn and repeat test. Repeat 1/8-turn increments until shifting is adequate. The gap will open wider than the 1mm target, but will still be as small as possible with adequate shifting.
7. If chain is shifting beyond the inner ring and falls off the chainring, gap may be too large or cage alignment may be off. Tighten L-screw 1/8 turn and check shift again. If chain ends up rubbing inner cage of derailleur, yet still drops off inner ring when shifting, other problems such as chain line or derailleur rotation exist.

PRIVACY SETTINGS

6 H-SCREW ADJUSTMENT

The outward travel of the front derailleur is stopped by the H-screw. When viewing the H-limit adjustment, make sure there is enough tension on the inner wire by either keeping extra pressure on the lever, or by pulling the exposed inner wire taut by hand. Use a rag to protect your hand if pulling the inner wire. After the H-screw is adjusted the inner wire should be re-tensioned to assure proper shifting.

1. Shift to outermost sprocket in rear and outermost front chainring. Inspect derailleur for mark indicating H-screw.
2. Pull inner wire with hand to increase tension to insure derailleur is against H-screw.
3. Maintain full pressure on inner wire and check gap between chain and outer cage plate. Only a small gap should be visible, about 1/16" or 1mm. Pedal bike slowly and continue to sight gap. Set clearance at tightest point in chainring rotation.

   If chain is rubbing cage, loosen H-screw 1/8 turn and pull fully on inner wire. Check gap again.

   If chain is not rubbing, tighten H-screw repeatedly until chain is 1mm
4. Test shift to the large ring. Shift derailleur from next to largest to largest ring using hand pressure on inner wire rather than shift lever. If shifting is slow, loosen H-limit screw slightly and repeat test. If chain shifts off the outside of the large chainring, the outer-limit is set too loose. Tighten H-screw limit and test shift again.

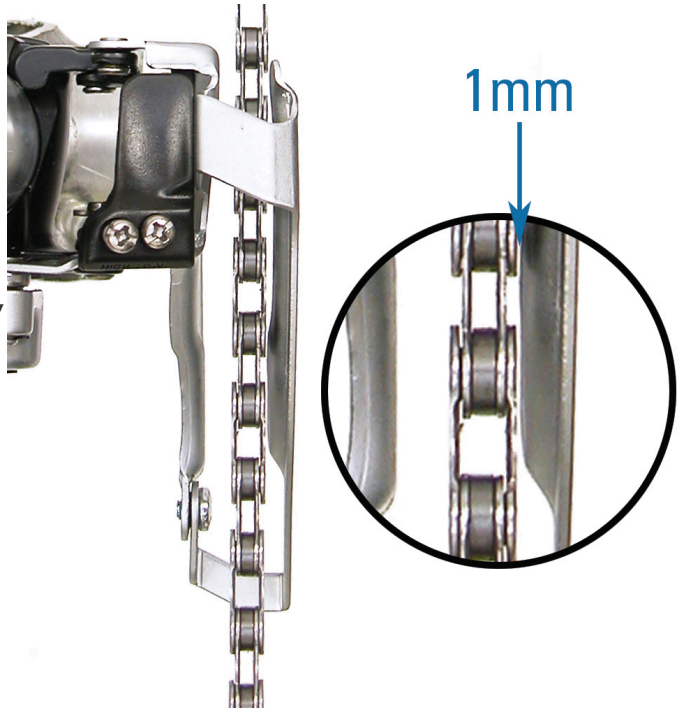

PRIVACY SETTINGS

7
INDEX ADJUSTMENT—THREE CHAINRING BIKES

Some front derailleur systems have an index setting. If the shift lever has three distinctive stops or clicks, it is an index shifter. If the front shift lever is friction, there is no index setting. If the front shift lever has multiple clicks, such as some twist grip style shifters, it is shifted similar to friction levers. Set indexing only after completing all adjustment above.

1. Shift chain to middle chainring in the front and innermost rear sprocket.
2. View gap between inner cage plate and chain. Gap should be as small as possible without rubbing chain.
3. To reduce gap, increase inner wire tension by turning barrel adjuster counter-clockwise. Adjusting barrel may be on frame or on shift lever. Check gap again.
4. If chain is rubbing cage, turn barrel adjuster clockwise, or inward toward shifter body.
5. If barrel adjuster is all the way in or out there will be no adjustment possible. In these cases reset the barrel. Shift to innermost chainring and loosen inner wire pinch bolt. Turn the barrel fully clockwise and back out about 2 full turns. Pull wire gently with fourth-hand tool and tighten pinch bolt. Begin adjustment of inner wire tension as above.

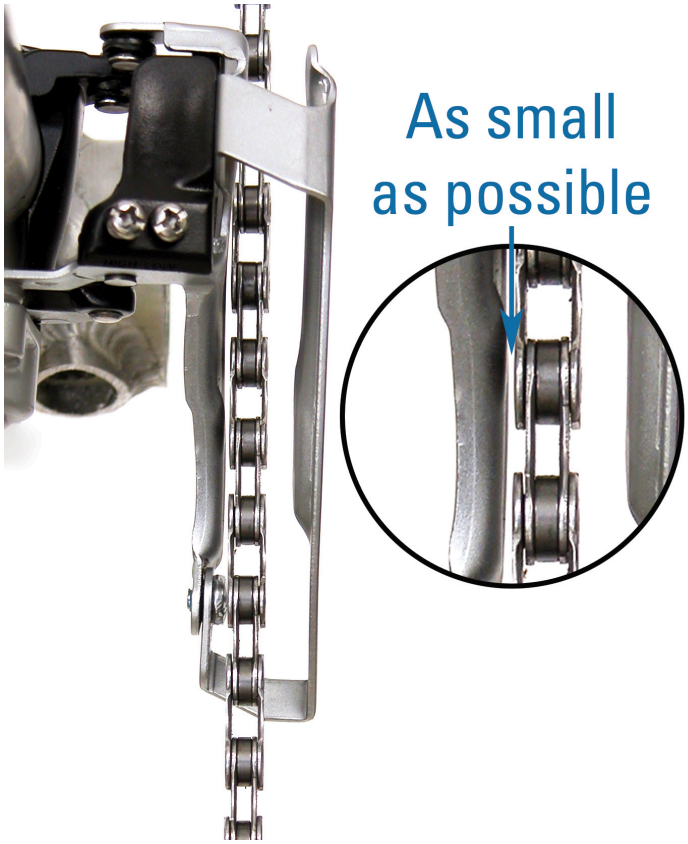

6. Test shift of front derailleur to all three front chain rings. If the derailleur rubs in the largest front chainring, double check H-limit screw and inner wire tension, which may

PRIVACY SETTINGS

be too loose. If chain is slow to shift to smallest chainring, double check L-limit screw and inner wire tension, which may be too tight.

8 INDEX ADJUSTMENT—TWO CHAINRING BIKES

Some front derailleur systems have an index setting. If the shift lever has two distinctive stops or clicks, it is indexing. If the front shift lever is friction, there is no index setting. NOTE: Some bike uses an “in-line” barrel adjuster to change housing length and set the indexing.

1. Shift chain to outer chain ring in the front and outermost rear cog.
2. View gap between outer cage plate and chain.
3. If outer cage plate clears chain, index setting is adequate.
4. If plate is rubbing chain, increase inner wire tension by turning adjusting barrel counter-clockwise and check again.
5. If barrel adjuster is all the way in or out there will be no adjustment possible. In these cases reset the barrel. Shift to innermost chainring and loosen inner wire pinch bolt. Turn the barrel fully clockwise and back out about 2 full turns. Pull wire gently with fourth-hand tool and tighten pinch bolt. Begin adjustment of inner wire tension as above.
6. Test shift of front derailleur to both front chainrings.

9 FRONT DERAILLEUR PERFORMANCE

PRIVACY SETTINGS

The front derailleur should shift the chain between chainrings without throwing the chain off the extreme outer and inner rings. It is possible that the front derailleur will rub the chain slightly even on properly adjusted bikes. This is likely on some bikes when riding in the largest sprocket in front and the smallest cog in back. As the bike is pedaled with force the frame flexes and moves the chainrings side to side, which cause an intermittent rubbing noise. Loosening the H-limit would move the front cage out more, and may stop the rubbing, but it may also cause the chain to shift over the largest ring and come off. If all aspects of front derailleur adjustments are correct on this bike, the rider is simply exceeding the engineering and design capabilities of the machine.

RELATED ARTICLES

- Rear Derailleur Adjustment View Article
- Rear Derailleur Hanger Alignment View Article
- Shift Levers / Shifters View Article

PRIVACY SETTINGS